FOCUS

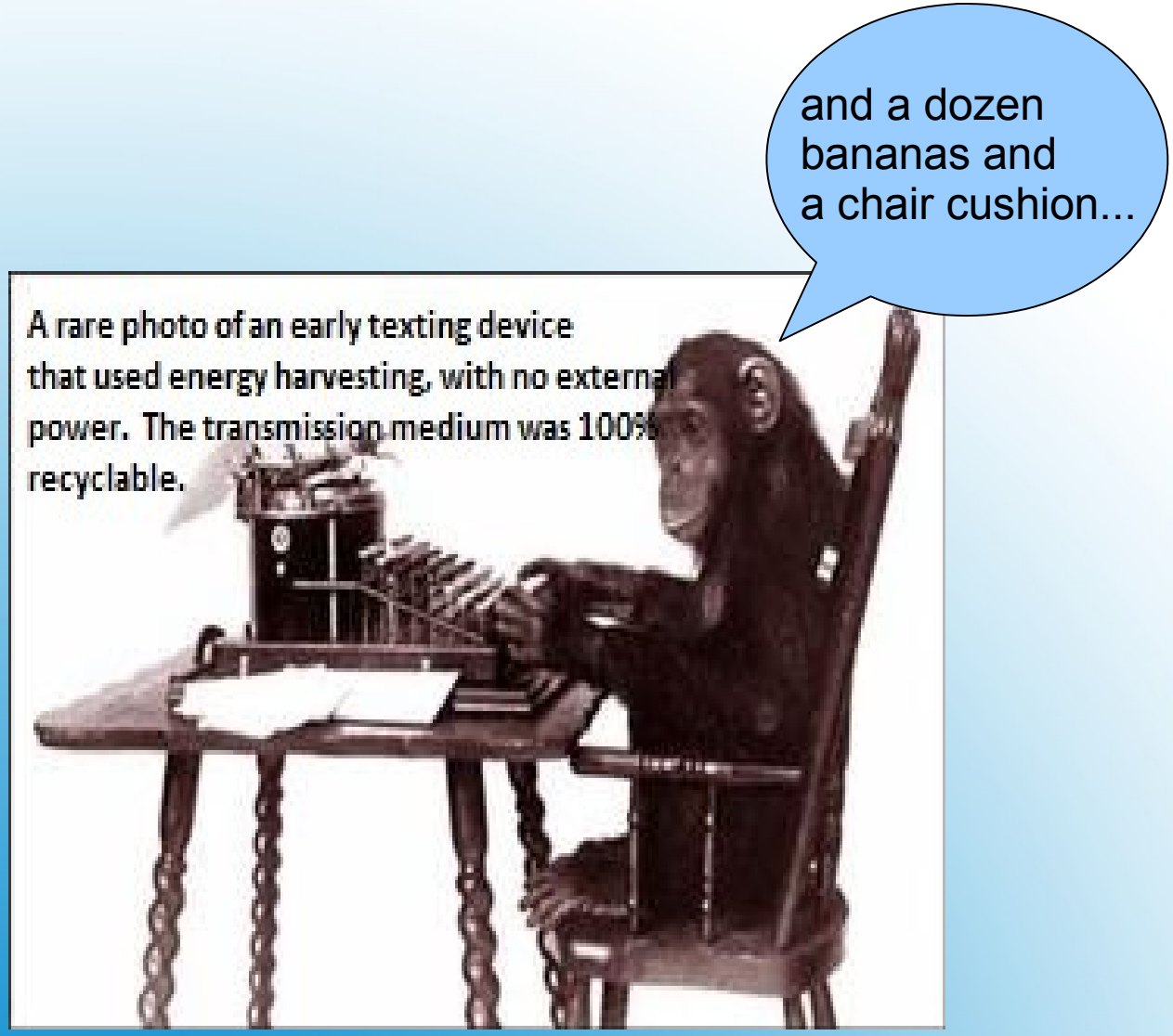

More Experiments in Thru-The-Earth Text Messaging

Brian Pease, W1IR

Antenna Specs **f** (kHz)	**# Turns**	**L**	**Z**	**R**series (Receive)	**R**parallel (Receive)	**Q**	**B**andwidth
15	310	9.72mh	6.0+j916	6	~140k	~152	99Hz
3.5	620	37.82mh	8.2+j831	8.2	~105k	~126	28Hz

The small rod antenna used for these tests

Type 61 ferrite (u=125) was used due to its good temperature stability
An 8 ft coax feedline is used to move the antenna away from the computer EMI. It weighs 1 lb, 3 oz

FM Digital Mode Specs Mode	No. of tones (one at a time)	Bandwidth Hz	Min s/n in 2500 Hz bandwidth	Transmission time, minutes	Message length char + spaces
WSPR-2	4	6	-28dB	2	13-fixed format
JT9-1	9	15.6	-24dB	1	13-free form
JASON	17	4 (Normal)	?	2.5 char/min	Any length
WSQ2	33	66	-25dB	1 char/2 sec	Any length

The 4 (very slow) text modes that I tested

See Speleonics 30, soon to be published on-line, for links to all of the software mentioned in this talk.

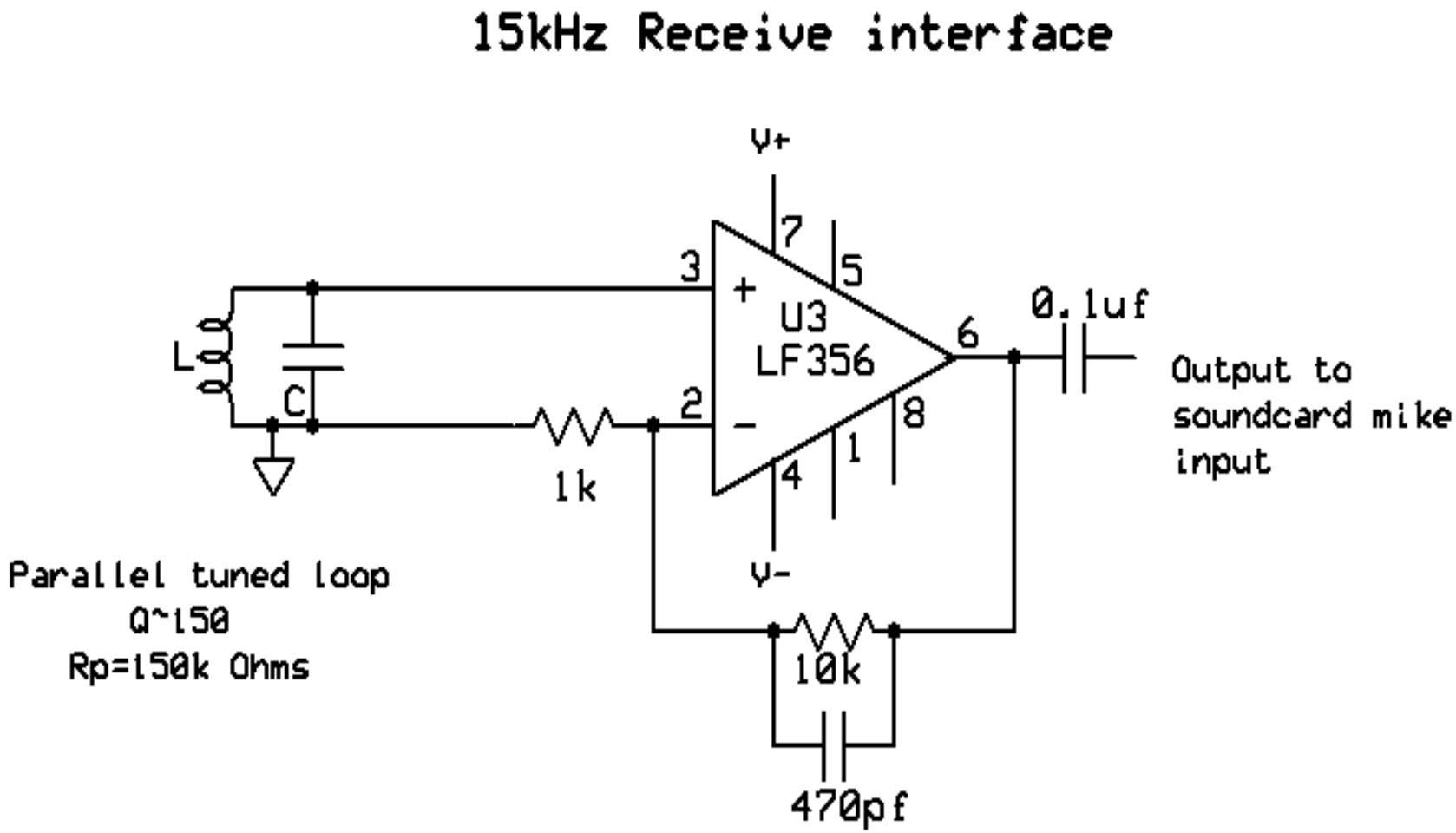

Simplified schematic of the high input impedance receive interface

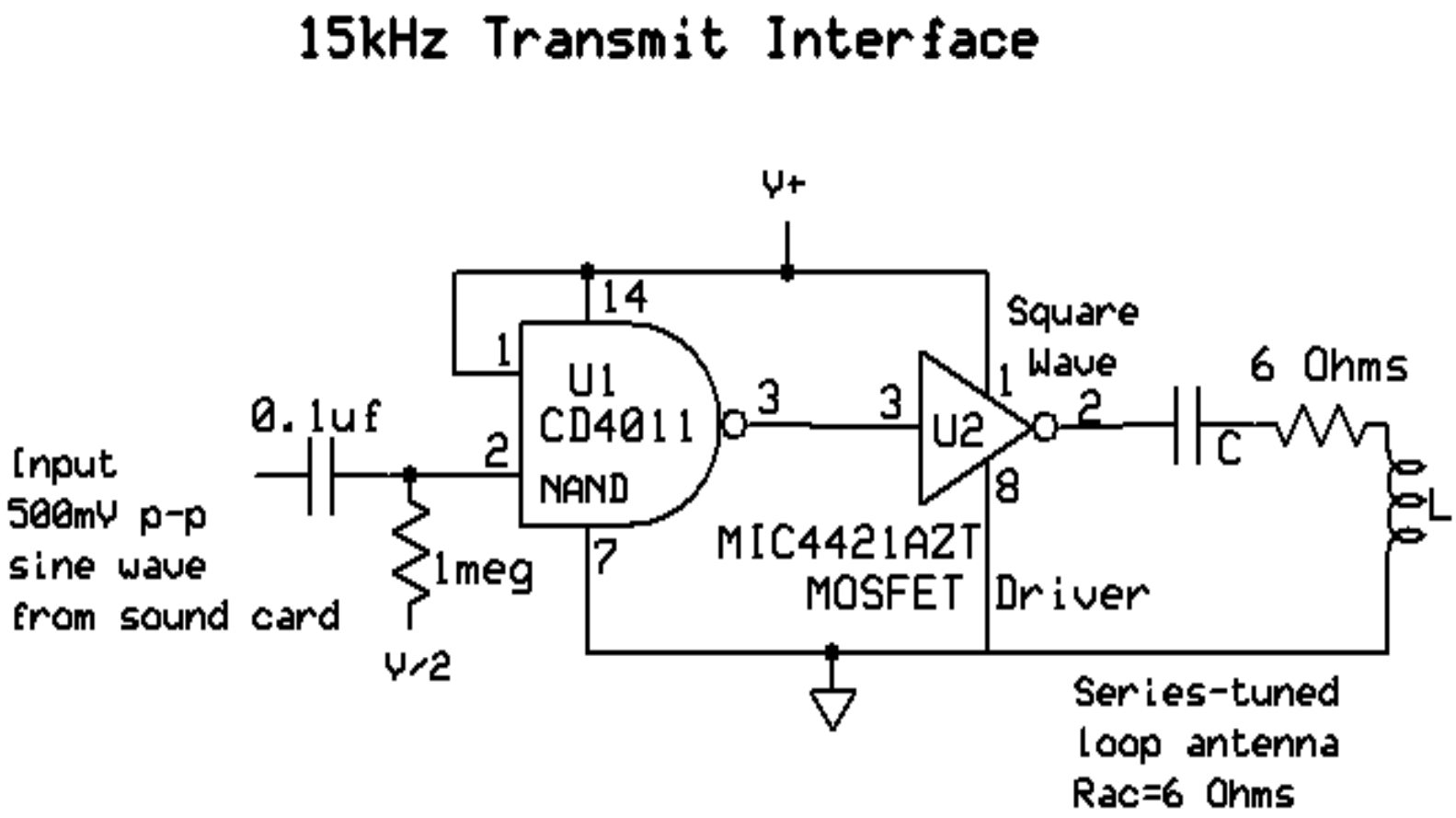

Note: Rac actually becomes quite a bit higher, increasing transmit bandwidth.

The high-gain non-linear transmit interface

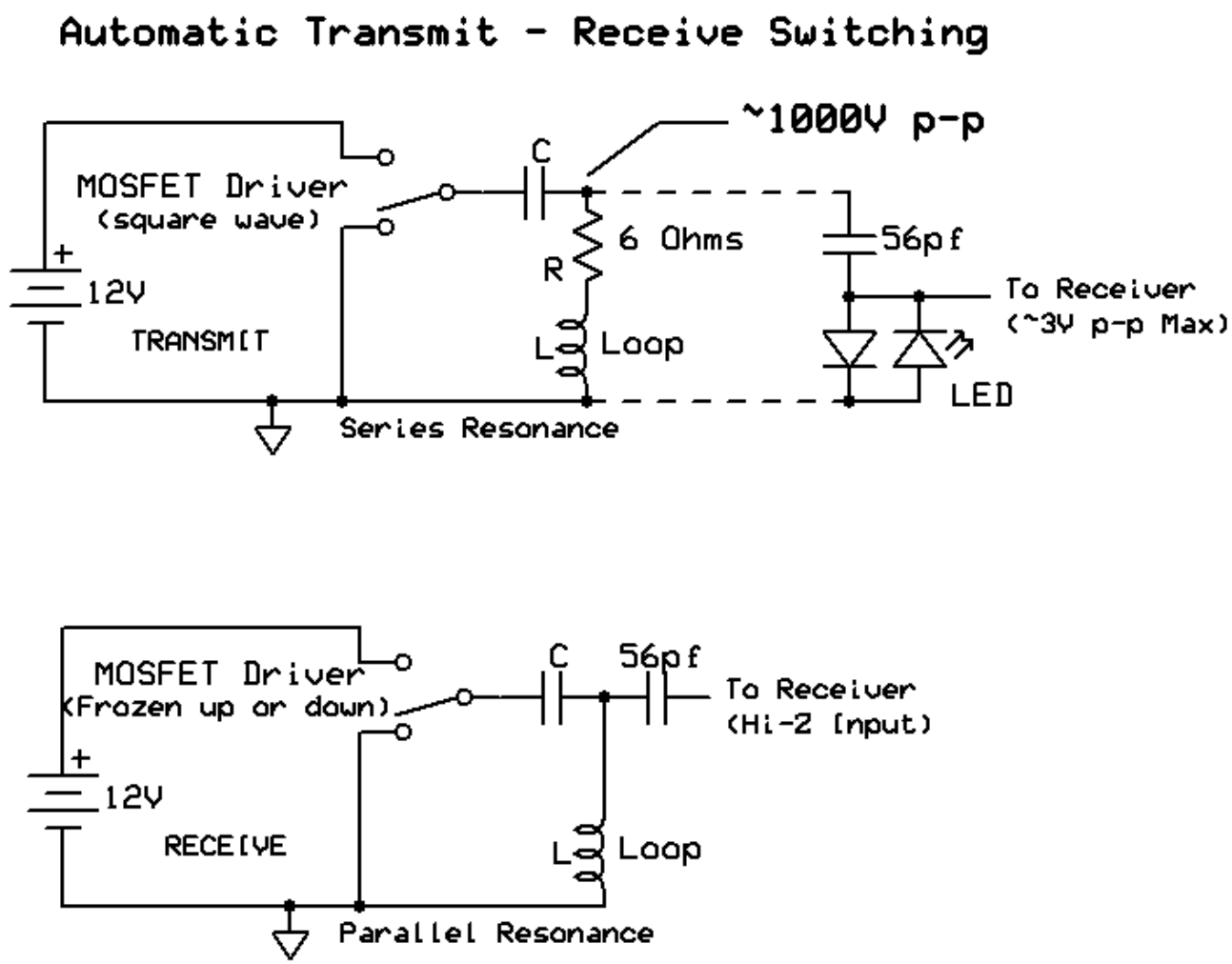

In Transmit mode the MOSFET Driver acts as a low impedance square wave source.

In Receive mode the MOSFET Driver shorts tuning capacitor C to (AC) ground.

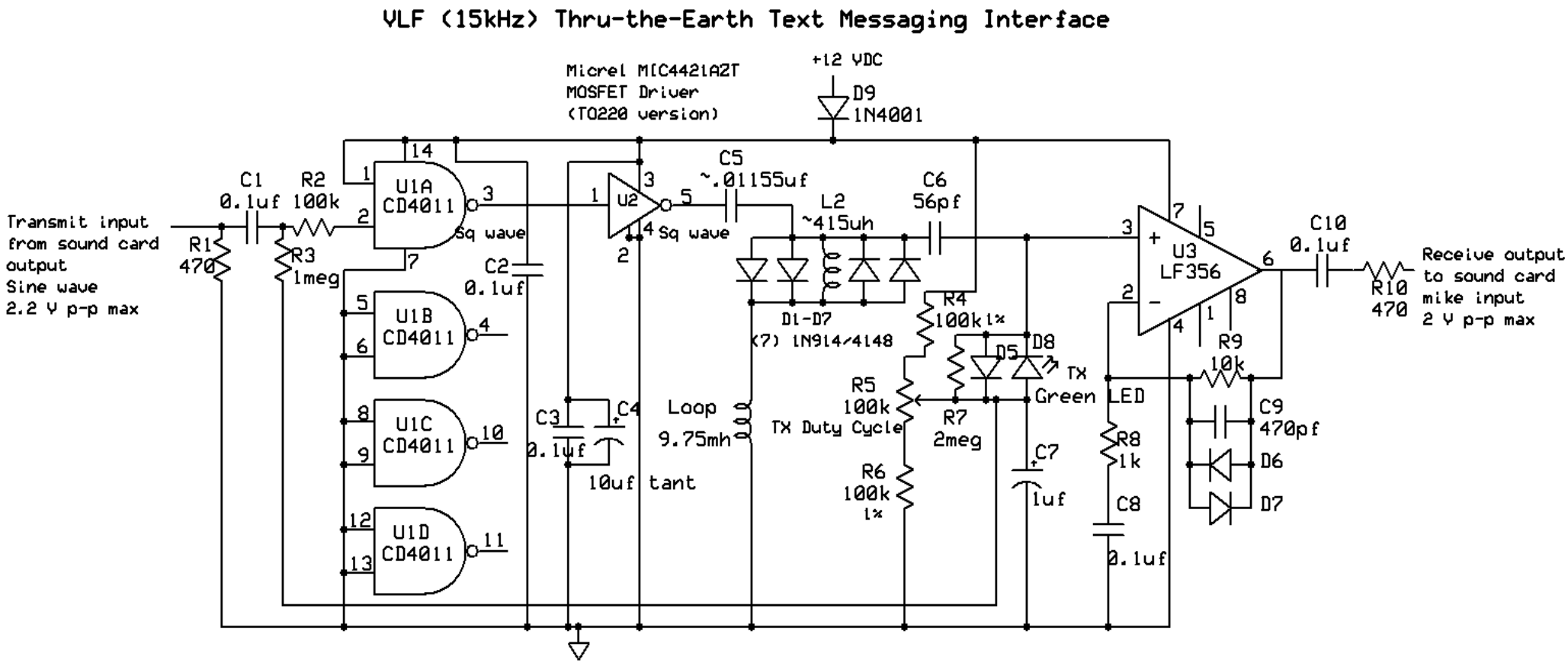

Several extra parts are required for biasing, protection, and stability. The high transmit current in the ferrite loop causes a slight increase in inductance. L2 adds the same amount of inductance during receive so that the antenna remains tuned to the same frequency.

The Sound Card Interface Circuit set up for testing at 3510Hz with the ferrite antennas.

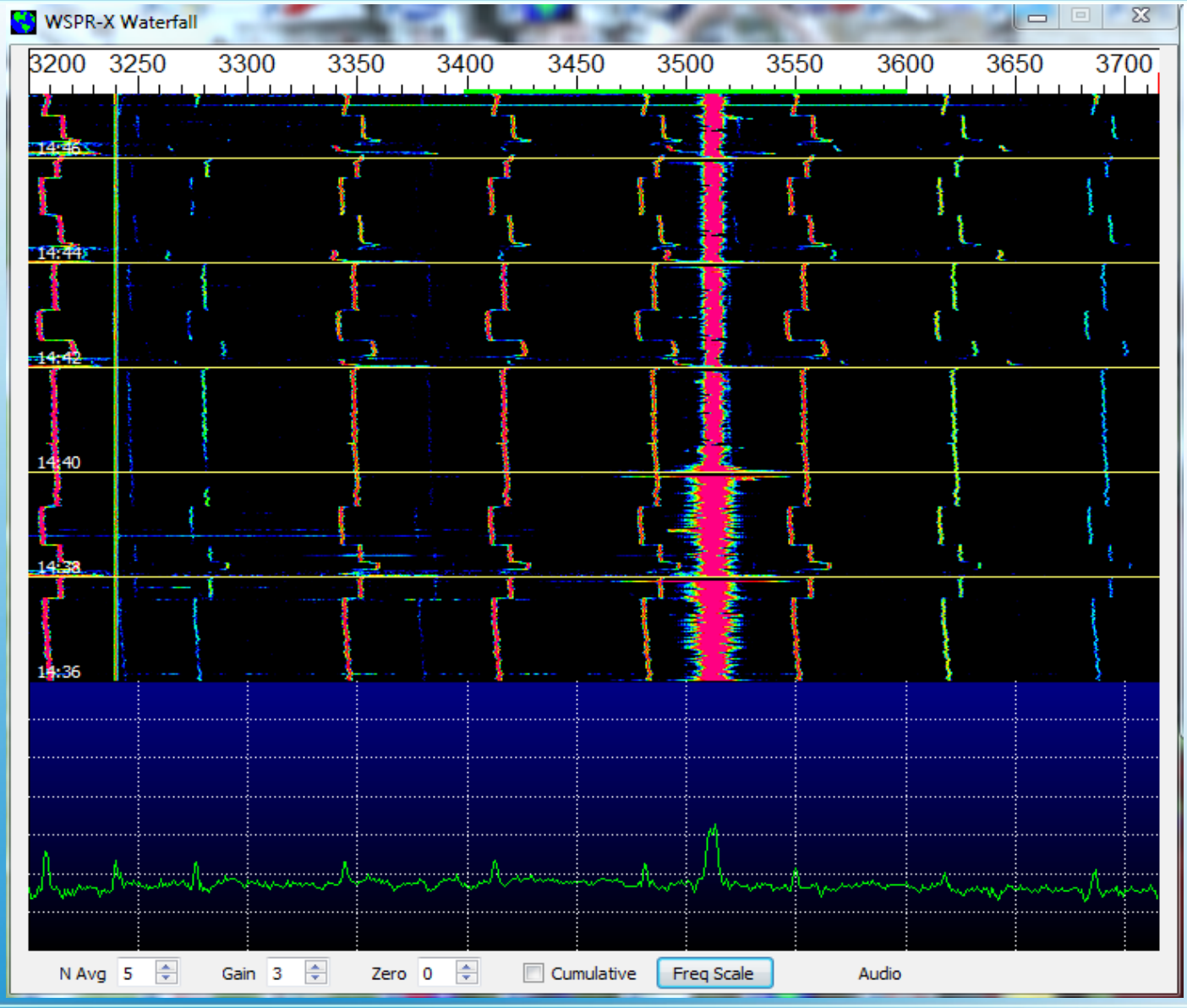

The WSPR-X waterfall display with spectrum plot below. The horizontal lines divide 2 minute intervals, with the newest data at the top. Frequency is close to 3510Hz.

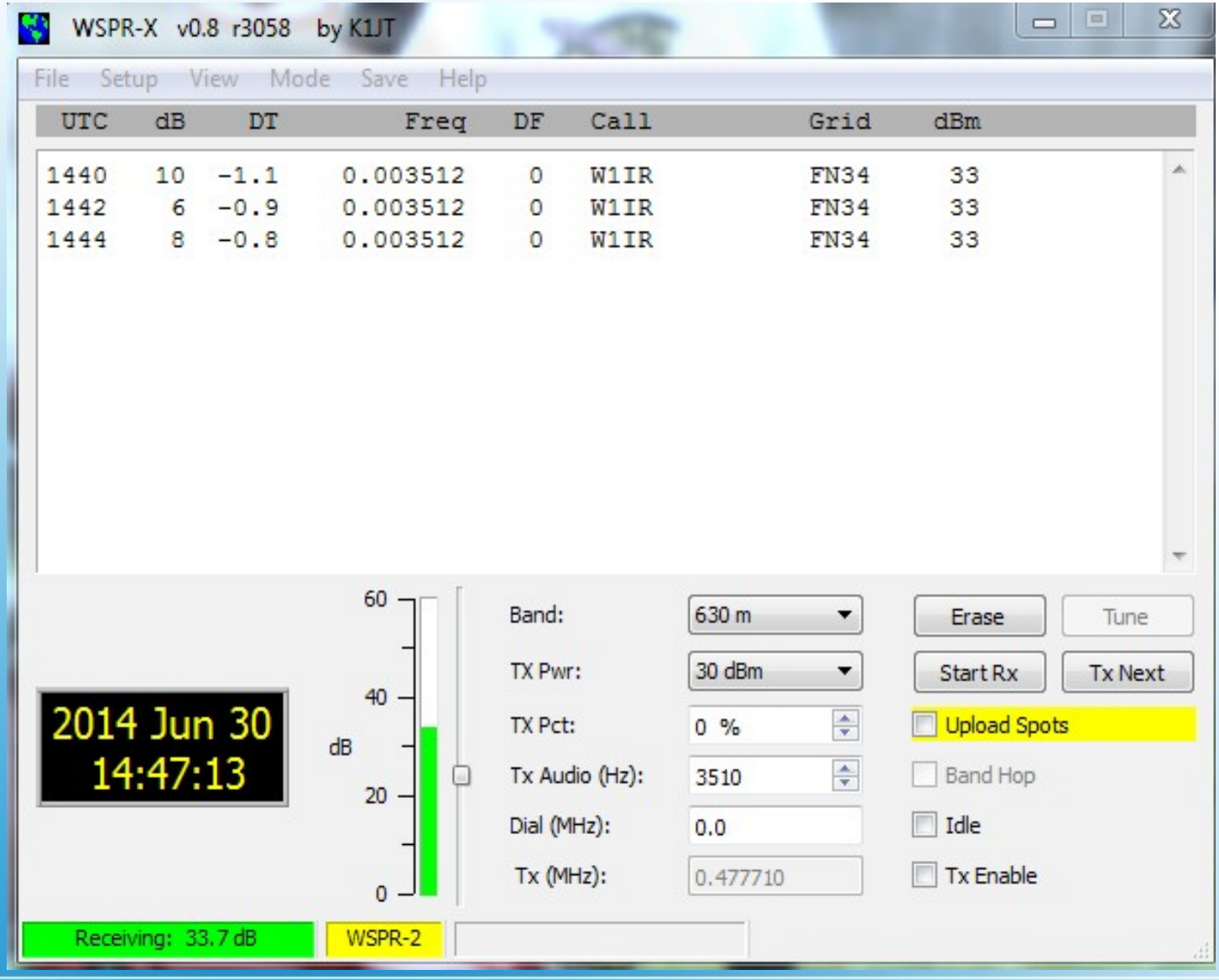

WSPR decodes. Each line is the decode from a 2 minute transmission, which was actually an audio link between 2 computers. The columns are: time; s/n in dB; timing error between TX and RX in seconds; the precise frequency of the lowest tone received; frequency drift in Hz; call, Maidenhead Grid location; and TX power.

Results using receive interface with 0dB gain

Distance meters	Distance feet	Decoded WSPR s/n, in dB//2500Hz BW, 15030Hz	Comments
80	262	-12,-12,-12,-12,-12,-12,-12,-12dB	Most decodes took 3-4 minutes at all distances, so the
100	328	-15,-15,-15,-14dB	software got behind!
130	426	-20,-20,-20dB	
150	492	-22,-22,-23,-22dB	This was the limit for 100% decodes
165	541	-23,missed,-23,-23,-23,missed,-23dB	Still 70% decode rate

Results using receive interface with +20dB gain

Distance meters	Distance feet	Decoded WSPR s/n, in dB//2500Hz BW 15030Hz	Comments
130	426	-16,-16,skipped some,-17dB	s/n may be better than before
150	492	-22,-20,-20,missed,-20,-20,skipped 2,-20	despite the missed decodes.

1530Hz Results

The narrow bandwidth of the antennas fooled the WSPR software into thinking that the noise level was lower than it actually was, making the s/n numbers better than they should be. Pretty good range for pocket-size antennas on both ends of the link.

Distance meters	Distance feet	Decoded WSPR s/n, in dB//2500Hz BW 3510Hz	Comments
100	328	-13,-13,-13,-13dB	Solid decodes
130	426	-17,-18,-18,-17,-18dB	Solid decodes
150	492	Signal just visible in waterfall display	No decodes

3510Hz Results

The distance was not quite as good as 15kHz, but transmit power was a little lower
The extremely narrow antenna bandwidths cause the falsely high s/n ratios.

The JT9 Mode

To test the JT9 mode on 3510Hz I changed software and checked that the computer Clocks were in sync. At 100 meters distance it decoded as follows:
Missed, missed, -17dBs/n, -18dB, -17dB, missed, missed, -18dB, -18dB,-18dB, missed
I had no decodes at further distances. As expected with it's shorter 1 minute transmit Time, it was not as good as WSPR, but it did work, and can send short “free form” text.

The JASON Mode

This mode will also work directly on 3510Hz and allows free-form text of unlimited Length, but is very slow. It does not need time synchronization. It's drawback is that it does not like to re-sync after a loss of signal. At 100 meters range I could clearly see the beacon signal, but JASON's receive software would not sync and decode.

These two text modes were also briefly tested.

The WSQ2 Mode

Late in the testing I became aware of the new WSQ2 digital text mode (Weak Signal QSO, 2 seconds per symbol) that is specifically designed for weak signal texting at the VLF/LF/MF frequencies where lightning burst noise dominates. It uses 33 tones sent one at a time with each 2 sec tone representing a lower case letter or punctuation. Upper case and numbers take 4 sec. It relies on the 2 sec tones being longer than the lightning bursts. There is no interleaving, FEC (forward error correction), or time synchronizing. Average thru-put is ~5 WPM, much faster than the other modes tested. In lab tests using real 15kHz atmospheric noise, it gave 100% copy down to about -25dB in a 2.4kHz BW and would re-sync reliably After 2 or 3 missed characters. It is also tolerant of tuning error, +/- 15Hz.

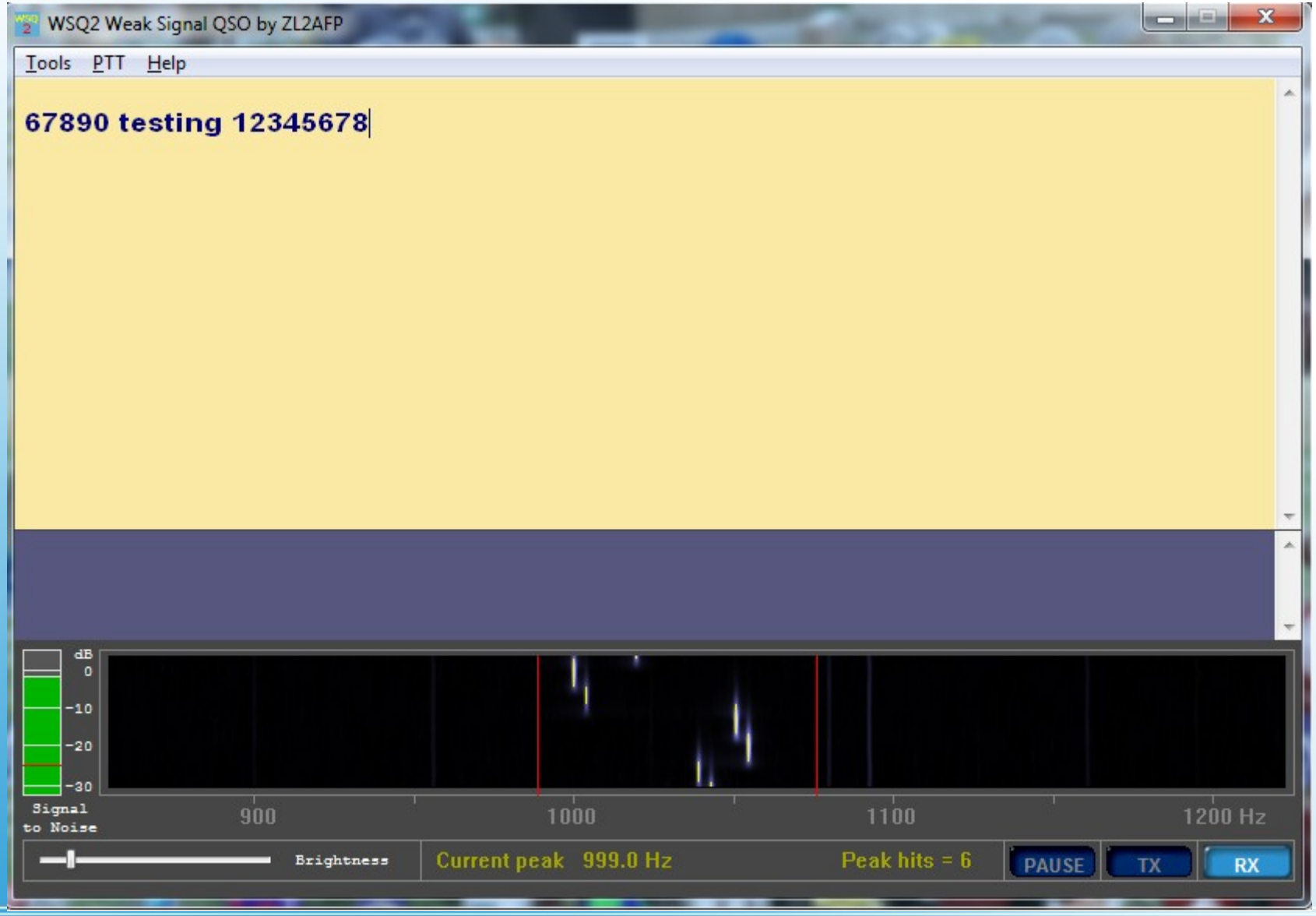

WSQ2 Receive Mode

WSQ2 uses true KISS software, with only necessary features included. The tones in the waterfall display do not actually overlap. The receive Band between the red lines is ~90Hz wide. The green bar is a real s/n Indicator. But, it only works at 1kHz so at first I had no way to test it.

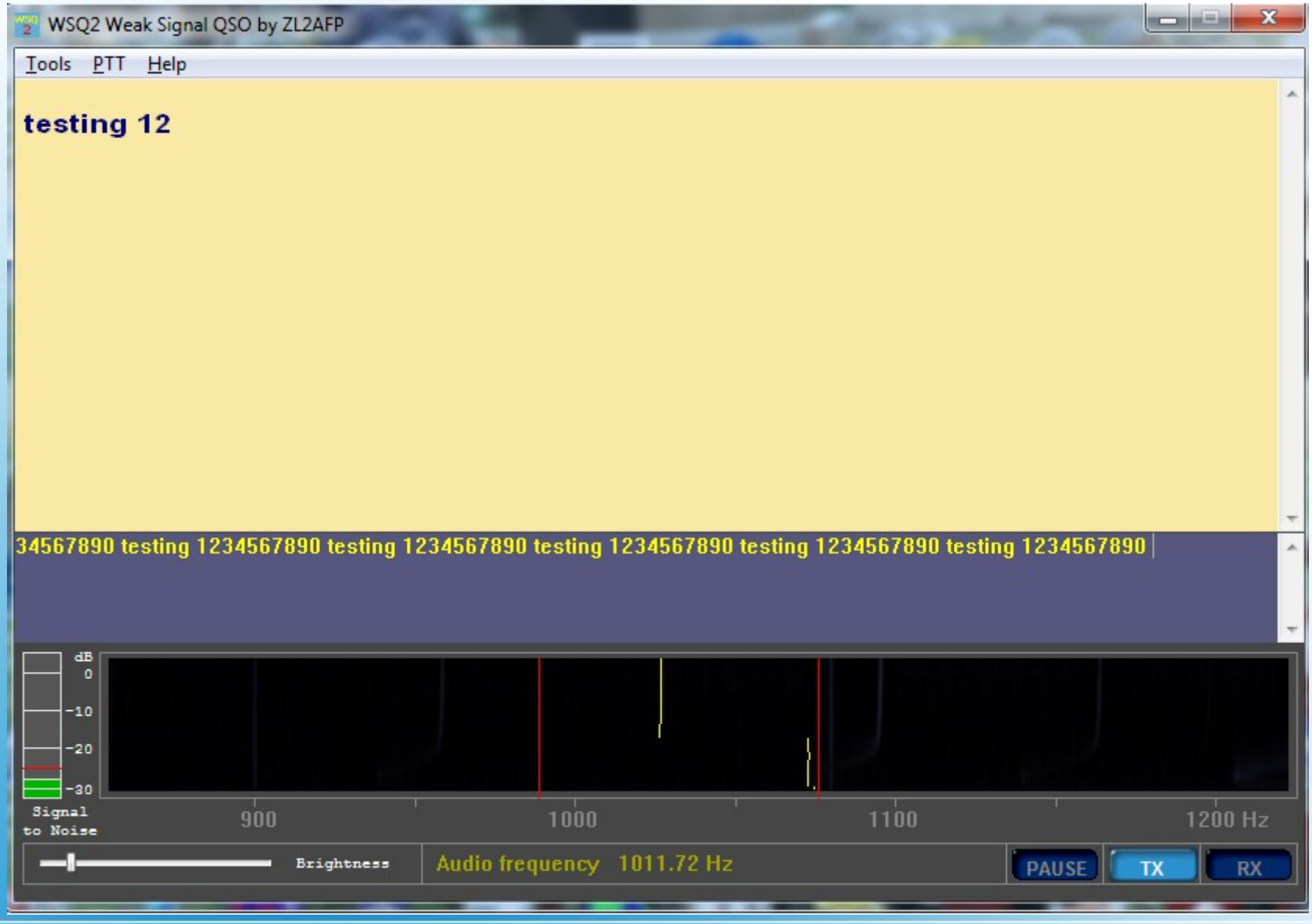

WSQ2 Transmit Mode

The yellow text is being transmitted, with the blue text showing what has been sent so far. Each of the 33 audio tone frequencies is displayed at the bottom as it is sent.

Frequency Conversion

Because the 99Hz receive bandwidth of the ferrite antennas is adequate for WSQ2, I decided to test on 15030Hz. After much searching and frustration, I found that I could use SDRadio to do both the up and down frequency conversion from the ~1030Hz center frequency of WSQ2. This is another piece of KISS software, and turns a sound card into a VLF receiver.

Note that this technique could be used with other digital mode software such as JT-9(or even voice!) on frequencies up to about 30-40kHz

<u>If I had discovered this earlier, I would have done all of my testing on 15kHz!</u>

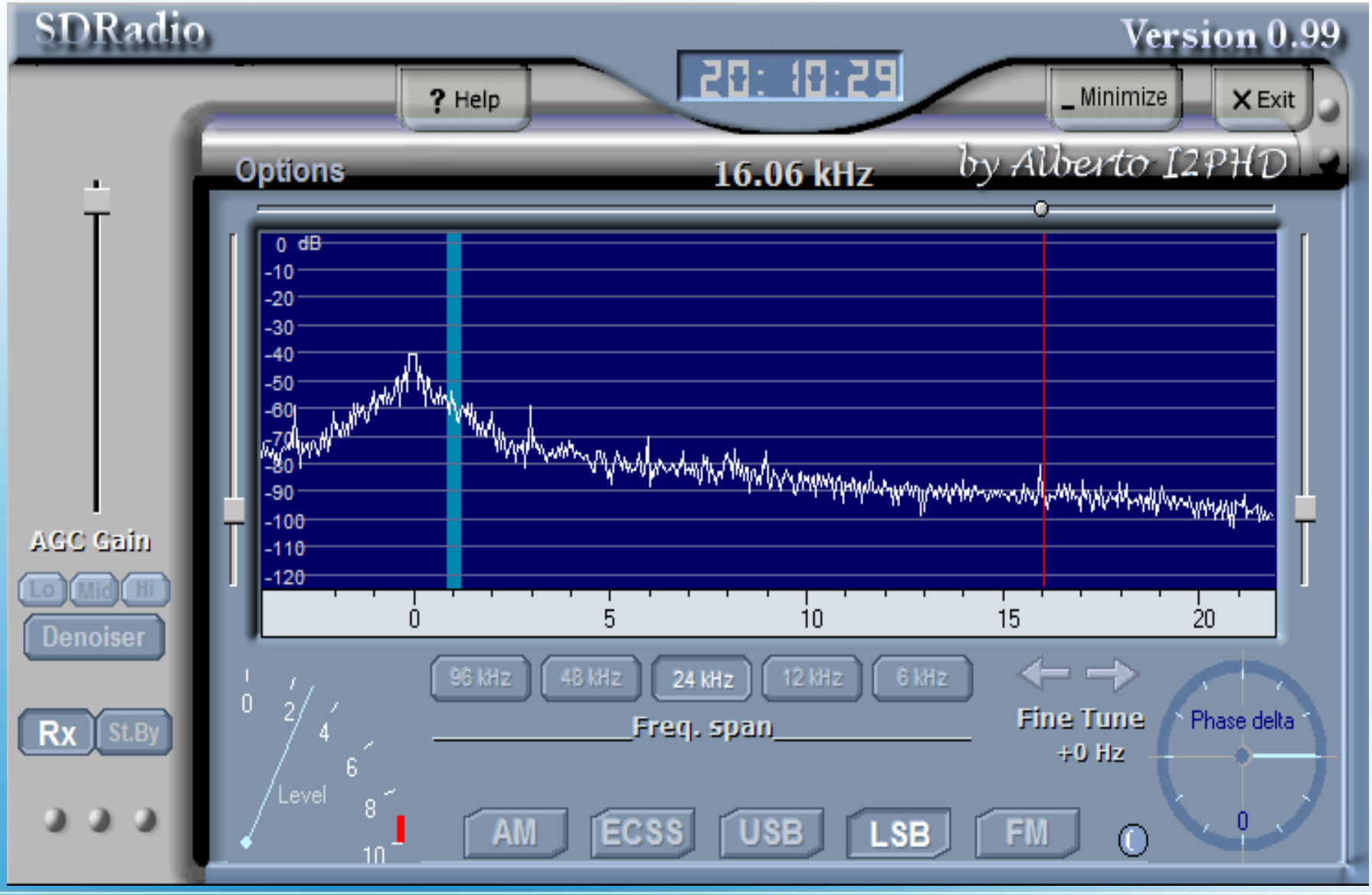

SDRadio set up to convert the ~1030Hz WSQ2 signal to ~15030Hz For transmission.

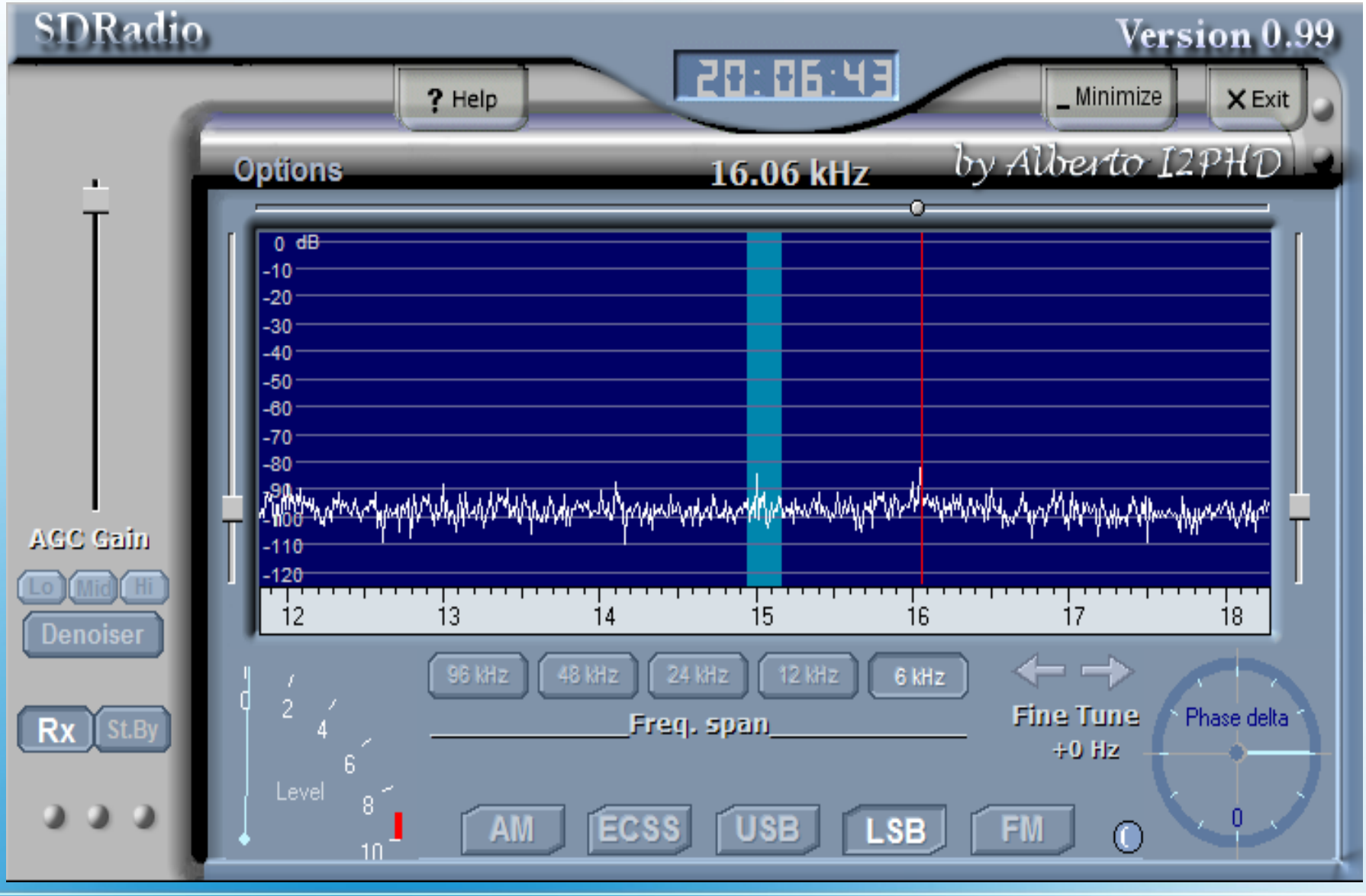

SDRadio set up to convert the received ~15030Hz signal back down to ~1030Hz for the WSQ2 software.

The Virtual Audio Cable

My remaining problem was how to run two sound card programs at the same time on one computer with one sound card. The solution was to install a Virtual Audio Cable (VAC) driver that would allow an internal digital connection between the programs. I downloaded a free VAC that was a bit cranky to install, but actually works. It shows up as additional choices when selecting sound sources for a program.

Note that this single VAC is only suitable for a one-way test with TX from one computer and RX on the other.

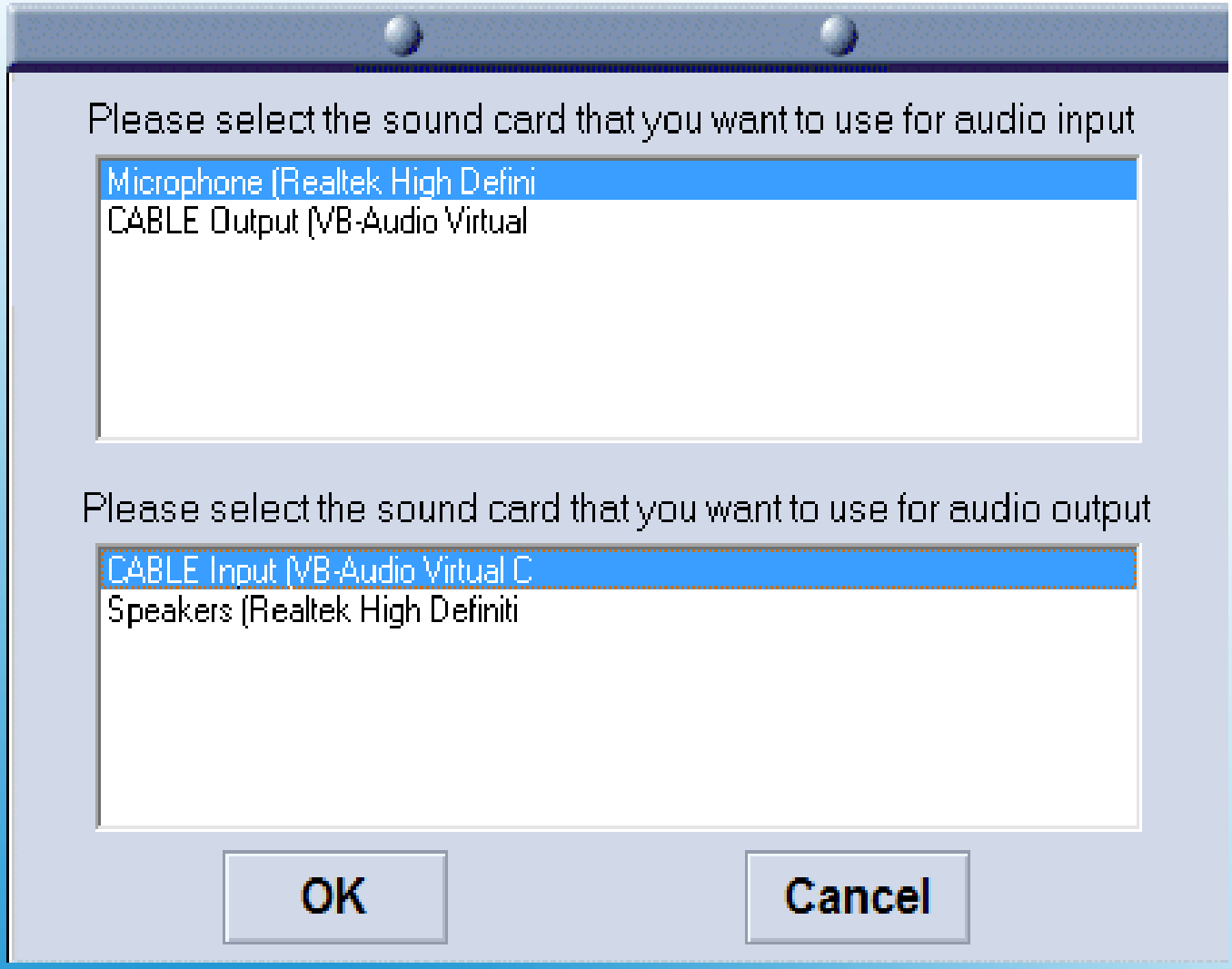

Here the SDRadio is used as a receiver. It takes received signals from the microphone jack, converts 15kHz to 1kHz, then sends them to the VAC.

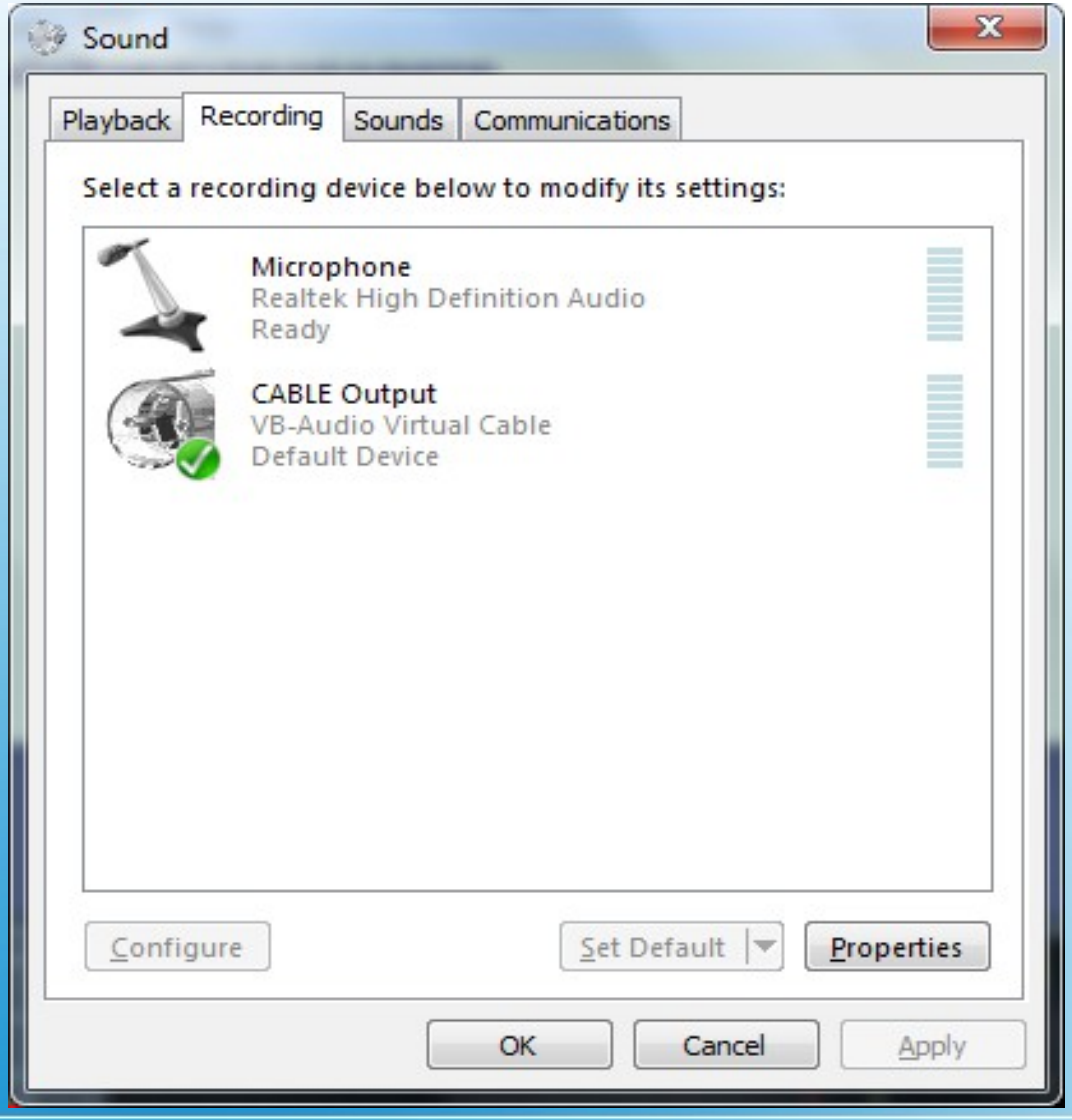

Here the 1kHz WSQ2 receiver input is connected to the output of the VAC

Murphy's Law now swung into action! Whether used as receiver or transmitter, my nice light netbook broke into some sort of internal oscillation when I attempted to run it on internal battery power. It was completely happy when plugged in. It was not a grounding problem. It is likely related to the use of the VAC as neither sound card program had this problem by itself. I had to lug my heavy laptop outdoors and transmit from the house with the netbook.

In the field, the 15kHz receiver was solidly atmospheric noise limited, with storms approaching from the west. Despite this, I managed ~90% copy at ~120m (394 ft) with the little rod antennas in coaxial orientation. The software would re-sync quickly, with only scattered Characters lost, a very promising result.

First outdoor test with of the WSQ2 mode

1) The WSQ2 mode is the most promising of the 4 sensitive text modes tested. It Is the fastest, the easiest to send messages with, re-syncs quickly after dropouts, And is very sensitive. It is narrow enough at 66Hz to work with the little rod antennas at 15kHz. It is said to place less demands on the computer than other modes, so it should run well on a small Windows tablet.

2) The need to use frequency conversion software and a Virtual Audio Cable for the WSQ2 mode (and other modes if 15kHz is used) makes the computers cranky to use and not practical for field use without experienced technicians at both ends.

3) With careful design and tuning, very small ferrite antennas can perform well at very low frequencies. I would expect a text downlink in typical limestone might Easily reach 100 meters (328 ft) depth or more with the gear I tested. The uplink Would be less (possibly much less), depending on man-made and atmospheric noise.

Conclusions, so far